Sophisticated Life Science Research Instrumentation

NewBehavior

IntelliCage

Cognitive screening for mice

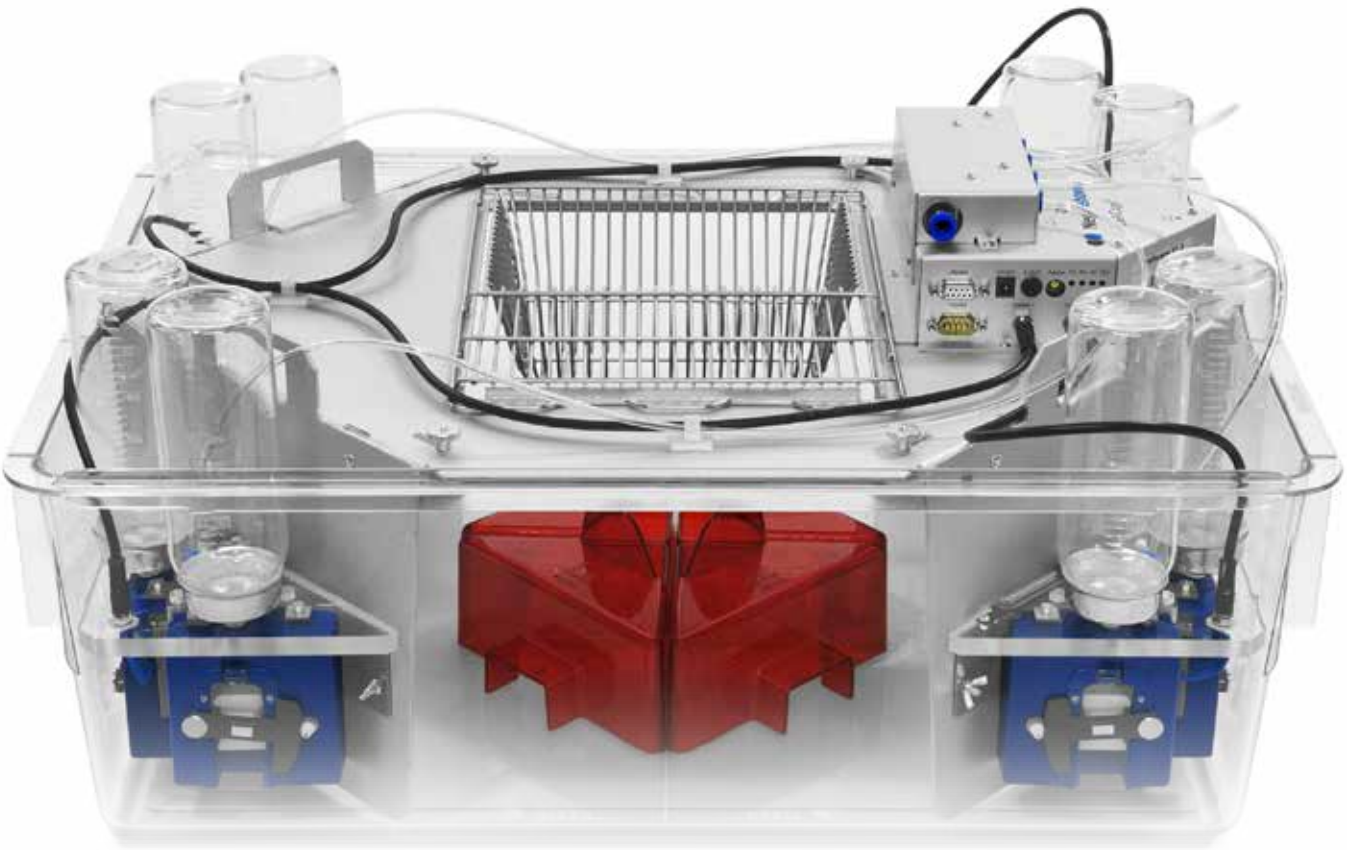

www.TSE-Systems.com

Info@TSE-Systems.com

Contents

- **IntelliCage System Description** 3
- **Hardware & Transponder Technology** 4
- **IntelliCage Plus Software** 5
  - Designer 5
  - Controller 6
  - Analyzer 6
- Freely Programmable Tasks 7
- Spontaneous Behavior 7
- Spatial Conditioning Tasks 8
- Operant Conditioning Tasks 8
- Taste Preference or Aversion 8
- **Applications** 9
- **Add-on AnimalGate** 9
- **Add-on SocialBox** 9
- **Publications** 10
- **References** 11

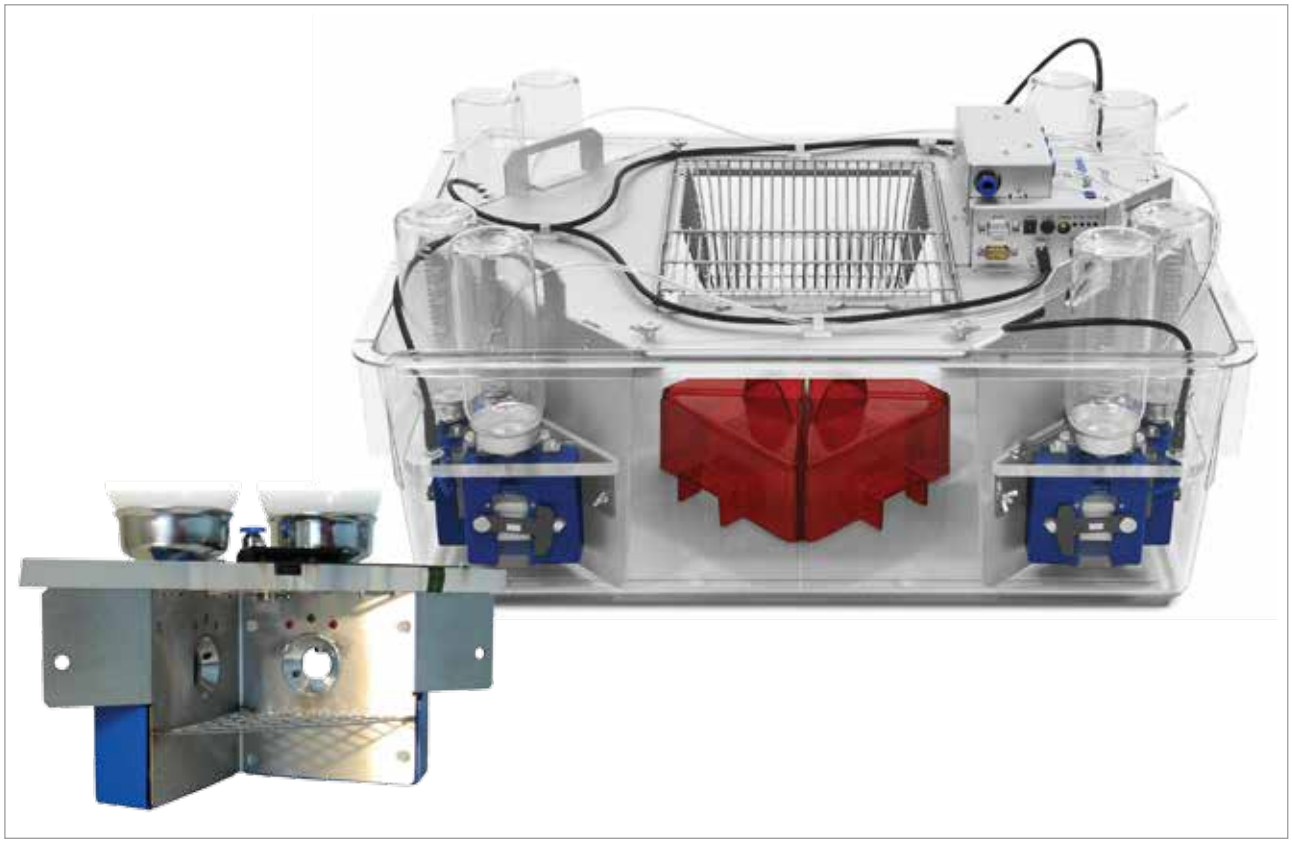

IntelliCage

System Description and Benefits

The IntelliCage is designed for long-term high-throughput investigation of cognitive abilities in laboratory mice. Social housed mice can perform a variety of freely programmable behavioral tasks in their home cage. Simple complex conditioning tasks or experiments can be graphically designed in a uniquely flexible manner and controlled for each individual animal in the IntelliCage. The individually tailored experimental protocols are automatically run and analyzed for large numbers of transponder tagged animals simultaneously in the same cage. This allows the investigation of experimentally induced phenotypic or genotypic effects on cognitive abilities as well as activity patterns. Such behavioral screening is frequently required in biomedical and basic behavioral, neurobiological, pharmacological and genetic research, and can be conducted in the IntelliCage with exceptionally high efficiency, standardization and minimal work load.

- Investigation of individual mouse behavior in the social context excluding stress
- Fully automated screening of complex learning procedures with online monitoring
- Ability to monitor individual learning over long time periods
- High level of animal welfare

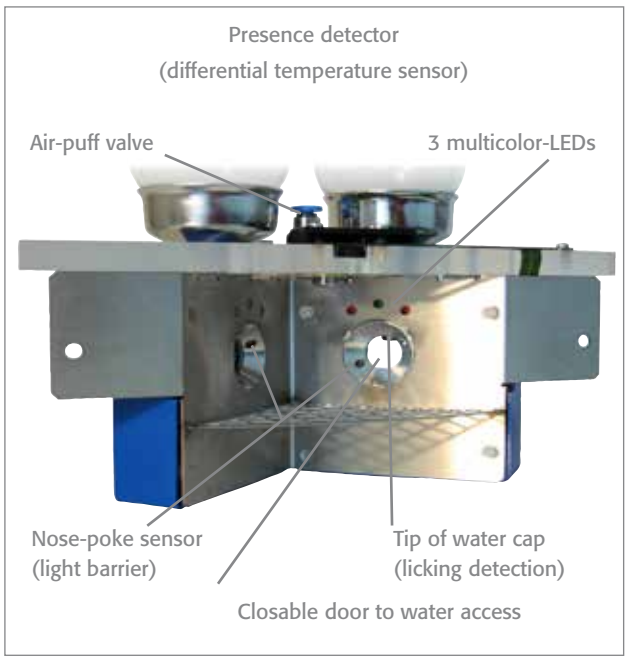

IntelliCage Corner

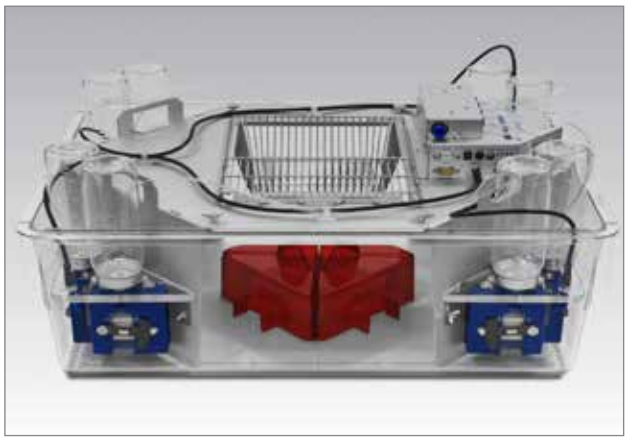

IntelliCage

Transponder

Hardware & Transponder Technology

- A single IntelliCage consists of four identical operant conditioning corners accommodating only one mouse at a time
- Each operant corner contains actors for shaping the animal's behavior according to individual reinforcement and conditioning protocols
  - one antenna for individual recognition of transponderized mice
  - two motorized doors blocking or allowing access to water bottles on both sides of the corner (positive reinforcement)
  - multicolor LED's above the doors on both sides (conditional stimuli)
  - one air-puff valve for delivering negative reinforcement
- Subcutaneously injected RFID-transponders for individual recognition of group-housed animals – a key feature of the system
- Up to 16 mice can be housed simultaneously within one single IntelliCage based on a standard cage (20 x 55 x 38 cm). For high-throughput testing up to 8 IntelliCages, each potentially containing 16 mice, can be connected to a single computer
- The following behavioral events of the animals are detected and recorded by specific sensors in the operant corners
  - Visits – RFID antenna identifies individual animals based on their transponder, a temperature-sensitive presence sensor detects the start, the end, and the duration of a corner visit
  - Nosepokes – interruptions of a light-beam sensor at both doors allowing access to water bottles
  - Drinking – the number and duration of tongue-contacts with nipples of the bottles are registered by a lickometer

Any of the behavioral activities or sequences can be connected to actions of the system in order to build up customized conditioning protocols (more detailed description in the Software section).

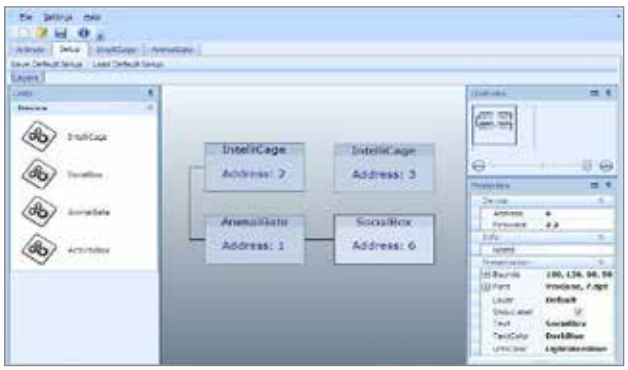

Designer - Hardware Setup

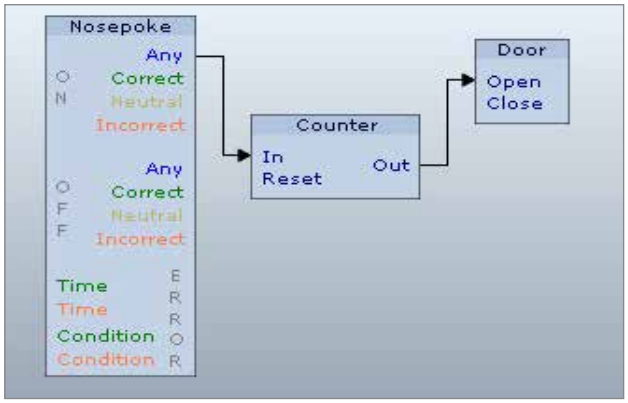

Designer - Simple Module

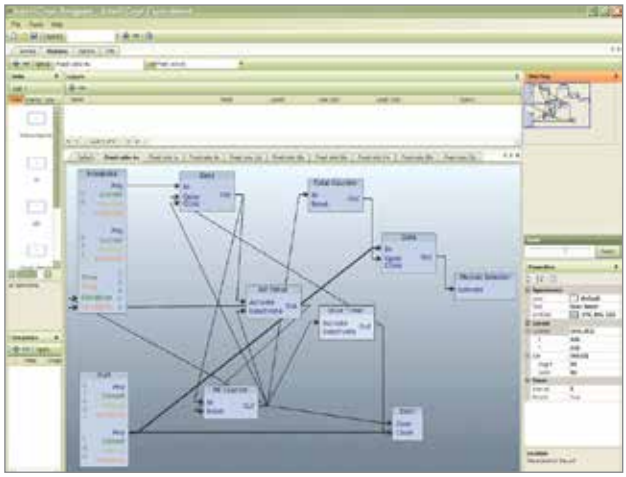

Designer - Advanced Module

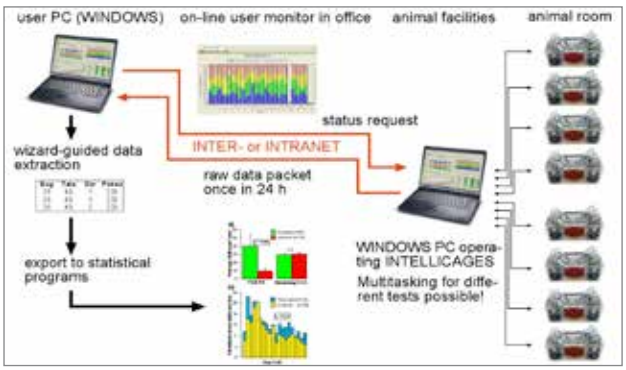

IntelliCage Setup

IntelliCage Plus Software

The functionality of the IntelliCage is achieved by the unique and user-friendly IntelliCage Plus Software consisting of three separate parts:

- Designer
- Controller
- Analyzer

Designer

The Designer software allows the definition of individual cognitive test schedules and protocols applied to each transponder-marked animal in the IntelliCage. Access to water (or other liquid) from bottles in specific corners can be used as positive reinforcement; air-puffs can be used for negative reinforcement and LEDs as conditional stimuli.The basic steps for configuring the experiment are the following:

- Specify hardware settings
- Create animal list (enter incorporate animal names and corresponding transponder numbers)
- Create experimental designs by assigning specific clusters to individual animals and modules to groups of animals

Clusters represent the status of cage components for each animal assigned to this cluster; each corner and each side within a corner can be independently defined as correct, neutral, or incorrect for any number of different clusters.

Create modules (experimental designs) defining events in specific corners (according to cluster information): link animal behavior (visit, nosepoke, lick) to trigger hardware events (door opening, lights, air-puff) – resulting in full control over conditioning behavior.

You can create several modules and imply switches between the clusters and/or modules that can be driven by the specific behavior of mice. Moreover, you can define day patterns where links between the modules or clusters occur at specified time of the day.
Custom schedules are available on request.

Controller

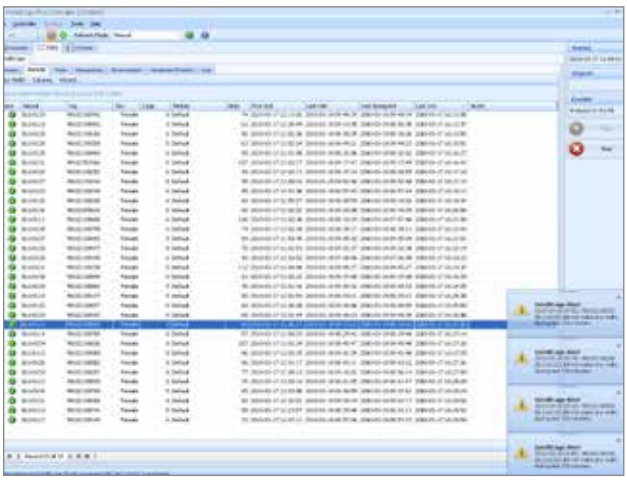

Controller - Animal list with alerts

Controller

The Controller extracts and stores all behavioral events (visits, nosepokes, licks) from the incoming stream of sensor data and provides an overview of data outputs referred to the controlled design. Thereby, IntelliCage measures the correct or incorrect presence of individuals in the conditioning corners, location and correctness of nosepokes, the incidence and extent of drinking behavior, and the occurrence of negative reinforcement (air-puffs). All these events can be monitored and visualized on the screen during the experiment in an overview console. The Controller further visualizes basic behavioral parameters during ongoing experiments, allowing online-monitoring of events and developments. The Controller saves experimental data into of individual animals or of animals in groups. At specified intervals the Controller can be programmed to send alerts if animal has no visits or licks during a specified period.

The Controller

- Executes the designed protocols
- Monitors the progress of the experiment in real-time
- Saves experimental data into zip-archives

Analyzer - Data graph (e.g. visits)

Analyzer - Charts (number of licks, nosepokes, visits)

Analyzer

The Analyzer software takes advantage of the stored behavioral sequence data in order to derive the temporal development of the animals' behavior in response to the designed conditioning protocols. Figures, tables and filtered data can be saved for export into other computer programs such as standard graphical and statistical packages.

The Analyzer allows to

- Open experimental data saved by the Controller
- Explore data, create and apply filters (e.g. by module, time, events etc.), create and export charts for customized views
- Save the filtered data into tab-delimited text files for further analysis by external statistical packages

Spontaneous Behavior
Basic activity levels, circadian activity

Spatial and Temporal
Stereotypical place preferences
Spatial preference and avoidance learning
Spatial reversal learning
Spontaneous alternation
Temporal conditioning
Temporo-spatial conditioning
Systematic patrolling schedules
Radial maze like patrolling

Social & Others
Competition rank order
Approach-avoidance conflicts

Discrimination Learning & Preferences
Visual discrimination
Gustatory discrimination learning
Spontaneous drug preference or avoidance

Memory
Procedural memory
Habituation
Spatial short-term (working memory)
Visceral / gustatory memory

Operant Conditioning
Procedural learning
Fixed ratio conditioning (motivation)
DRL (different reinforcement of low responding, response inhibition, timing)

Free programmable tasks

Freely programmable tasks

The IntelliCage offers an enormous flexibility for designing behavioral and conditioning protocols – customer-specific demands can be adapted by a simple graphical design.

Behavioral domains covered by programmable tasks in the IntelliCage:

1) Spontaneous behavior – anxiety, neophobia, exploration, behavioral stereotypies, habituation, circadian activity
2) Spatial and temporal behavior – place preferences and avoidance learning, reversal learning, spontaneous alternation, temporal conditioning, patrolling schedules
3) Discrimination learning – visual discrimination, gustatory discrimination, spontaneous drug preference or avoidance
4) Memory – habituation, working and reference memory, gustatory memory, procedural memory
5) Operant conditioning – fixed or progressive ratio conditioning, differential reinforcement of low responding (DRL)

A few most common and straightforward tasks are explained in the text sessions. The scientific hypothesis and goal of the specific study regulates which tasks need to be performed or combined into a test battery. It is important to note that the animals need not to be kept permanently in the IntelliCages. Test cohorts can be formed and kept in ordinary cages. Animals adapt very rapidly after being reintroduced to the IntelliCage allowing efficient long-term monitoring.

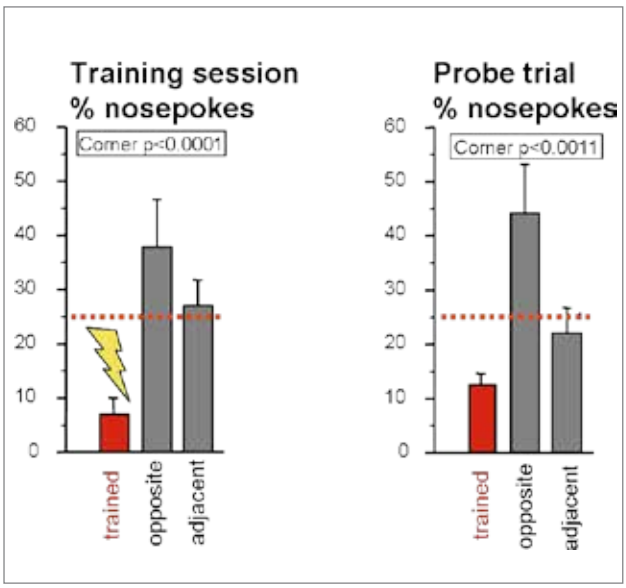

Spatial avoidance during training and probe test (DP. Wolfer)

Spontaneous behavior

Free adaptation

Animals are released in the IntelliCage with all doors open for an adaptation period. Neophobia and habituation can be detected by latency and number of the corner visits and initiation of drinking. The number of corner visits also provides a reliable measure of activity, allowing the detection of individual circadian rhythms. The adaptation period is particularly useful for establishing individual baselines and detecting behavioral anomalies in mutant mice.

Nosepoke adaptation

The doors are closed at the beginning of the module and can be opened only by nosepoking into the door area. This can be viewed as most simple fixed ratio 1 operant conditioning procedure in the IntelliCage.

Temporal conditioning

Several conventional learning tests require food or water deprivation for increasing the motivation of the animals and the training is carried out in discrete trials. This can be programmed in the IntelliCage. Access to water can be restricted to certain time periods during the dark or light phase. Using temporally restricted drinking access provides information about temporal learning abilities and might be a prerequisite for subsequent learning tasks.

Spatial conditioning tasks

Nosepoke avoidance with probe trial

One of the four corners is assigned as incorrect for each individual mouse, where nosepokes are punished with air-puffs and doors are not opened. Following a retention interval (e.g. 1 or 7 days) animals are returned to the IntelliCage for a 'probe trial' period where nosepokes open the door in each corner and no airpuffs are applied. This task shares similarities with conventional spatial learning and memory procedures (e.g. water maze, but also fear conditioning or passive avoidance) where a certain delay is implied between training and testing.

Corner preference / avoidance

Preference learning: one corner is assigned to be correct for each individual animal in which water is accessible. Acquisition of this task can be followed by reversal learning, where the opposite corner is assigned to be correct.
Avoidance learning: the visits to one or more incorrect corners are punished with air-puffs.

Serial reversal

The correct corner is changed for each drinking session.

Patrolling designs

The position of the correct corner is rotated clockwise or anti-clockwise after correct visit, or actual drinking, or after each visit.

Operant conditioning tasks

Light discrimination

The correct side for making the nosepoke and opening the door is indicated by LED in the beginning of visit. The correct side is randomly changed for each corner visit.

Impulsivity and DRL procedures

The animal initiates a trial with the first nose-poke and is required to wait for certain delay for making the second nose-poke to open the door. The delay can be signaled by a light stimulus.

Attention

Animals are required to make a nosepoke when LED is on. Stimulus duration can be shortened progressively along with random delay for switching the LED on after beginning of the visit.

Delay discounting

Each corner contains two bottles – one with plain water and one with sweet solution (e.g. sucrose). During training both doors are opened at the same time, animals can learn the positions of sweet solution and are expected to show preference. Following adaptation the door to water is opened immediately when visit begins, while the other door will be opened only if the animals tolerate the pre-defined delay without drinking water. Thus, the mice can choose between immediate access to water and delayed access to sweet solution.

Taste preference or aversion

Conditioned taste aversion (CTA)

During training the conditioned group has access to bottles with sucrose and LiCl or water. For testing, the animals can choose between water and sucrose.

Other gustatory preference/avoidance tasks

As one cage contains 4 corners with two bottles each, it can be seen as an excellent environment for testing spontaneous preference or avoidance to different concentrations of various compounds.

Practical examples for validation

Animals with an hippocampal lesion can be reliably distinguished from control mice already during early adaptation and in various learning tasks (Voikar et al. (2010)).

a) Initial inhibition (longer latencies to visit the corners) followed by hyperactivity

b) Spatial stereotypies (increased percentage of re-entries)

c) Impaired temporal conditioning (increased activity before the drinking sessions)

d) Impaired corner avoidance learning and memory

e) Impaired learning of patrolling

Applications of the IntelliCage

Change in behavior is the most sensitive biological end-point informing about any alterations within the organism. Therefore, careful behavioral analysis of animal models is an important part in modern biomedical studies. The following fields of research can take advantage of IntelliCage:

1) High-throughput behavioral phenotyping – several international initiatives aim at targeting most of the genes in mouse genome with long-term goal at identification of specific functions of every single gene. The success of these projects depends on phenotyping procedures applied for characterization of mutant mice.
2) Assessment of disease models – IntelliCage allows longitudinal studies, where animals can visit the system several times during their life-span, thereby allowing to detect early or age dependent signs and symptoms of a disorder (e.g. Huntington's disease, Alzheimer 's disease).
3) Mechanistic studies – e.g. brain lesion studies for testing involvement of specific structures in different behavioral domains, leading to better general understanding of mouse behavioral biology.
4) Behavioral genetics – a lot of information on inbred strain differences has been obtained during the past 15 years in conventional tests, testing in the IntelliCage can advance these comparisons further.
5) Pharmacological studies – drugs can be administered orally in drinking water or delivered via osmotic mini-pumps.

AnimalGate

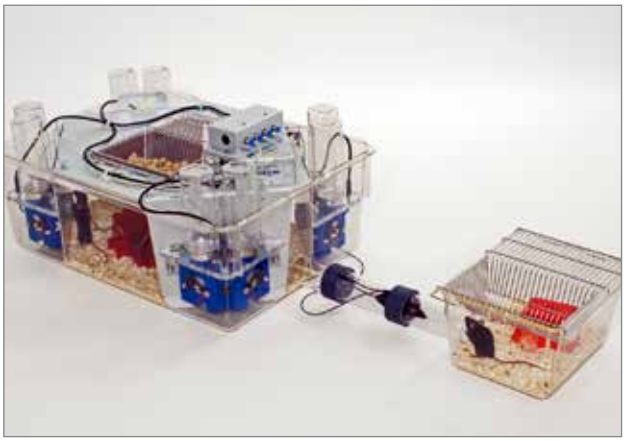

SocialBox

Add-on AnimalGate

- expands IntelliCages to a multi-area system with selective access for individual mice
- senses the direction of passage and distributes animals according to your directives
- measures precisely body weight of mice passing
- permits individual access to specific food or liquid sources, and any other connected area
- expands the capacity of IntelliCage for measuring food consumption behavior
- creates the opportunity to apply treatments differentially to specific animals without handling

Add-on SocialBox

- expands IntelliCages to a multi-area system
- allows studies on social and/or preference patterns
- up to 4 additional rooms for each IntelliCage offer additional space for enriched environment if requested

IntelliCage References (selected)

2013

- **Branchi I, Santarelli S, Capoccia S, Poggini S, D'Andrea I, Cirulli F, Alleva E.** Antidepressant treatment outcome depends on the quality of the living environment: a pre-clinical investigation in mice. PlosOne 2013; 8(4): e62226

- **Knapska E, Lioudyno V, Kiryk A, Mikosz M, Górkiewicz T, Michaluk P, Gawlak M, Chaturvedi M, Mochol G, Balcerzyk M, Wojcik DK, Wilczynski GM, Kaczmarek L.** Measuring basal and complex behaviors of rats in automated social home cage systems using IntelliCage for rat technology. Journal of Neuroscience 2013; 33(36): 14591-600

- **Kobayashi Y, Sano Y, Vannoni E, Goto H, Suzuki H, Oba A, Kawasaki H, Kanba S, Lipp HP, Murphy NP, Wolfer DP, Itohara S.** Genetic dissection of medial habenula-interpeduncular nucleus pathway function in mice. Front Behav Neurosci 2013; 07: 17

- **Parkitna JR, Sikora M, Gołda S, Gołembiowska K, Bystrowska B, Engblom D, Bilbao A, Przewlocki R.** Novelty-seeking behaviors and the escalation of alcohol drinking after abstinence in mice are controlled by metabotropic glutamate receptor 5 on controlled by metabotropic glutamate receptor 5 on neurons expressing dopamine D1 receptors. Biological Psychiatry 2013; 73(3): 263-70

2012

- **Jedynak P, Jaholkowski P, Wozniak G, Sandi C, Kaczmarek L, Filipkowski RK.** Lack of cyclin D2 impairing adult brain neurogenesis alters hippocampal-dependent behavioral tasks without reducing learning ability. Behavioural Brain Research 2012; 227: 159-166

- **Ramakers GJ, Wolfer D, Rosenberger G, Kuchenbecker K, Kreienkamp HJ, Prange-Kiel J, Rune G, Richter K, Langnaese K, Masneuf S, Bösl MR, Fischer KD, Krugers HJ, Lipp HP, van Galen E, Kutsche K.** Dysregulation of Rho GTPases in the {alpha}Pix/Arhgef6 mouse model of X-linked intellectual disability is paralleled by impaired structural and synaptic plasticity and cognitive deficits. Human Molecular Genetics 2011; 21(2): 268-86

2011

- **d'Isa R, Clapcote SJ, Voikar V, Wolfer DP, Giese KP, Brambilla R, Fasano S.** Mice Lacking Ras-GRF1 Show Contextual Fear Conditioning but not Spatial Memory Impairments: Convergent Evidence from Two Independently Generated Mouse Mutant Lines. Frontiers in Behavioral Neuroscience 2011; 5: 78

- **Endo T, Maekawa F, Võikar V, Haijima A, Uemura Y, Zhan Y, Miyazaki W, Suyama S, Shimazaki K, Wolfer DP, Yada T, Tohyama C, Lipp HP, Kakeyama.** Automated test of behavioral flexibility in mice using a behavioral sequencing task in IntelliCage. Behavioural Brain Research 2011; 221(1): 172-81

- **Ermakova O, Piszcek L, Luciani L, Cavalli FMG, Ferreira T, Farley D, Rizzo S, Paolicelli RC, Al-Banchaabouchi M, Nerlov C, Moriggl R, Luscombe NM, Gross C.** Sensitized phenotypic screening identifies gene dosage sensitive region on chromosome 11 that predisposes to disease in mice. EMBO Molecular Medicine 2011; 3: 50-66

- **Faizi M, Bader PL, Tun C, Encarnacion A, Kleschevnikov A, Belichenko P, Saw N, Priestley M, Tsien RW, Mobley WC, Shamloo M.** Comprehensive behavioral phenotyping of Ts65Dn mouse model of down syndrome: Activation of beta1-adrenergic receptor vy xamoterol as a potential cognitive enhancer. Neurobiology of Disease 2011; 43(2): 397-413

- **Karlsson N, Kalm M, Nilsson MK, Mallard C, Björk-Eriksson T, Blomgren K.** Learning and activity after irradiation of the young mouse brain analyzed in adulthood using unbiased monitoring in a home cage environment. Radiation Research 2011; 175(3): 336-346

- **Kiryk A, Mochol G, Filipkowski RK, Wawrzyniak M, Lioudyno V, Knapska E, Gorkiewicz T, Balcerzsk M, Lski S, Van Leuven F, Lipp HP, Wójcik DK, Kaczmarek L.** Cognitive abilities of Alzheimer´s disease transgenic micce are modulated by social context and circadian rhythm. Current Alzheimer Research 2011; 8(8): 883-892

- **Lan WCJ, Priestley M, Mayoral SR, Tian L, Shamloo M, Penn AA.** Sex-specific cognitive deficits and regional brain volume loss in mice exposed to chronic, sublethal hypoxia. Pediatric Research 2011; 70(1): 15-20

- **Oakeshott S, Balci F, Filippov I, Murphy C, Port R, Connor D, Paintdakhi A, LeSauter J, Menalled L, Ramboz S, Kwak S, Howland D, Silver R, Brunner D.** Circadian abnormalities in motor activity in a BAC transgenic mouse model of huntington´s disease. Public Library of Science Currents 2011; 3: RRN12251

- **Radwanska K, Kaczmarek L.** Characterization of an alcohol addiction-prone phenotype in mice. Addiction Biology 2011; 17(3): 601-12

- **Sekiguchi K, Imamura S, Yamaguchi T, Tabuchi M, Kanno H, Terawaki K, Kase Y, Ikarashi Y.** Effects of yokukansan and donepezil on learning disturbance and aggressiveness induced by intracerebroventricular injection of amyloid beta protein in mice. Phytotherapy Research 2011; 25: 501-7

- **Weyer SW, Klevanski M, Delekate A, Voikar V, Aydin D, Hick M, Filippov M, Drost N, Schaller KL, Saar M, Vogt MA, Gass P, Samanta A, Jäschke A, Korte M, Wolfer DP, Caldwell JH, Müller UC.** APP and APLP2 are essential at PNS and CNS synapses for transmission, spatial learning and LTP. EMBO Journal 2011; 30(11): 2266-80

2010

- **Barlind A, Karlsson N, Björk-Eriksson T, Isgaard J, Blomgren K.** Decreased cytogenesis in the granule cell layer of the hippocampus and impaired place learning after irradiation of the young mouse brain evaluated using the IntelliCage platform. Experimental Brain Research 2010; 201(4): 781-787

- **Codita A, Gumucio A, Lannfelt L, Gellerfors P, Winblad B, Mohammed AH, Nilsson LNG.** Impaired behavior of female tg-ArcSwe APP mice in the IntelliCage: a longitudinal study. Behavioural Brain Research 2010; 215: 83-94

- **Konopka W, Kiryk A, Novak M, Herwerth M, Parkitna JR, Wawrzyniak M, Kowarsch A, Michaluk P, Dzwonek J, Arnsperger T, Wilczynski G, Merkenschlager M, Theis FJ, Köhr G, Kaczmarek L, Schütz G.** MicroRNA loss enhances learning and memory in mice. Journal of Neuroscience 2010; 30(44): 14835-42

- **Krackow S, Vannoni E, Codita A, Mohammed AH, Cirulli F, Branchi I, Alleva E, Reichelt A, Willuweit A, Voikar V, Colacicco G, Wolfer DP, Buschmann JU, Safi K, Lipp HP.** Consistent behavioral phenotype differences between inbred mouse strains in the IntelliCage. Genes, Brain and Behavior 2010; 9(7): 722-731

- **Ludolph AC, Bendotti C, Blaugrund E, Chio A, Greensmith L, Loeffler JP, Mead R, Niessen HG, Petri S, Pradat PF, Robberecht W, Ruegg M, Schwalenstöcker B, Stiller D, Van Den Berg L, Vieira F, Von Horsten S.** Guidlines for preclinical animal research in ALS/MND: A consensus meeting. Amyotrophic Lateral Sclerosis 2010; 11: 38-45

- **Urbach YK, Bode FJ, Jguyen HP, Riess O, von Hörsten S.** Neurobehavioral tests in rat models of degenerative brain diseases. Methods in Molecular Biology 2010; 597: 333-52

- **Voikar V, Colacicco G, Gruber O, Vannoni E, Lipp HP, Wolfer DP.** Conditioned response suppression in the IntelliCage: assessment of mouse strain differences and effects of hippocampal and striatal lesions on acquisition and retention of memory. Behavioural Brain Research 2010; 213: 304-312

Service & Warranty

TSE Systems offers a Two (2) Years ALL-IN Premium Warranty with all new products, including:

- 24/7 technical hotline
- Remote maintenance and update function
- On-site visits upon necessity
- Free replacement parts

After the expiry of the warranty period, TSE Systems offers comprehensive extensions of the warranty or economical maintenance and repair contracts to ensure the continued smooth running of your instruments. Please contact us for further details.